GAMA ELECTRONICS

HPC-1 Wiring Diagram for Stationary Hydraulic Pumps

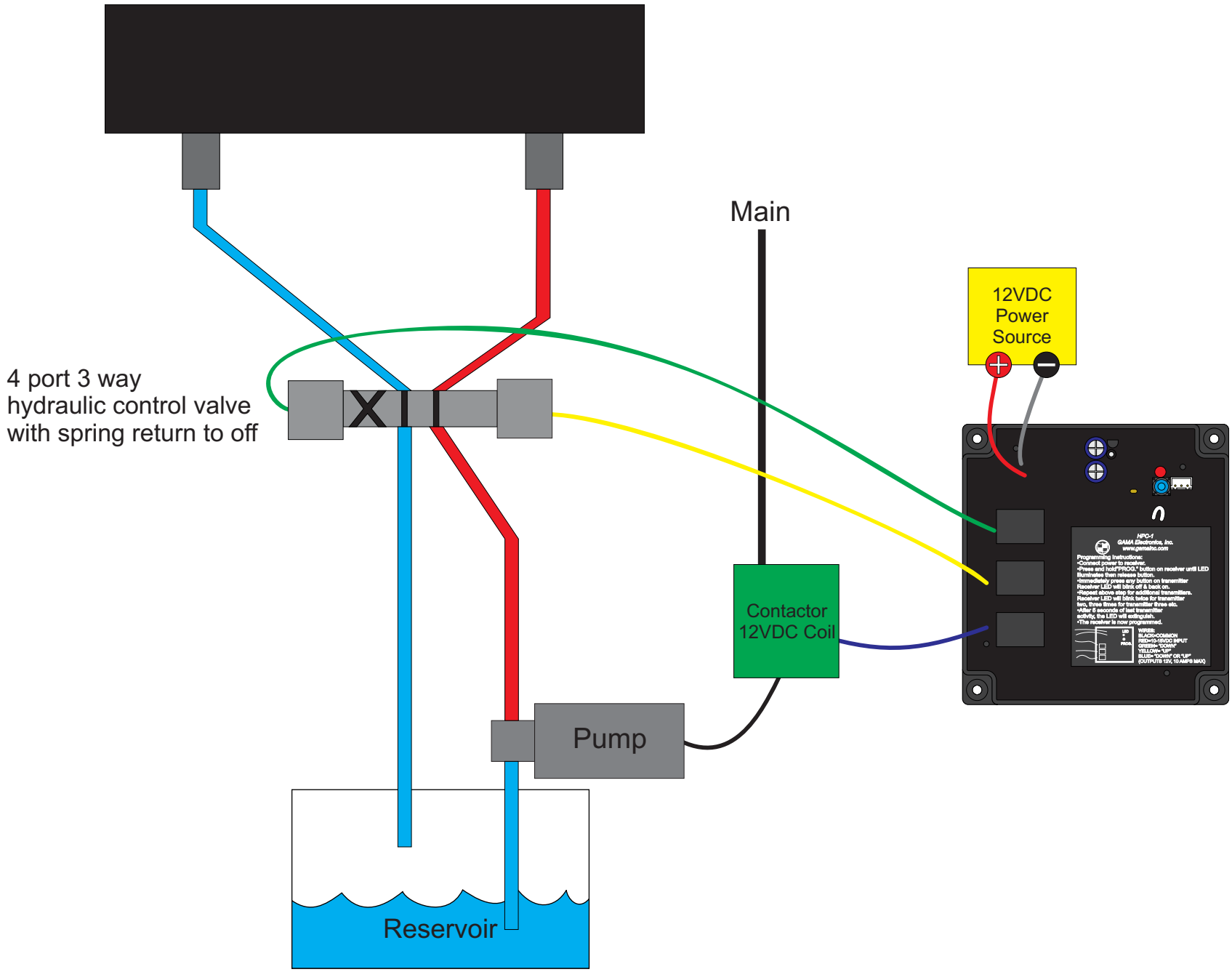

GAMA ELECTRONICS
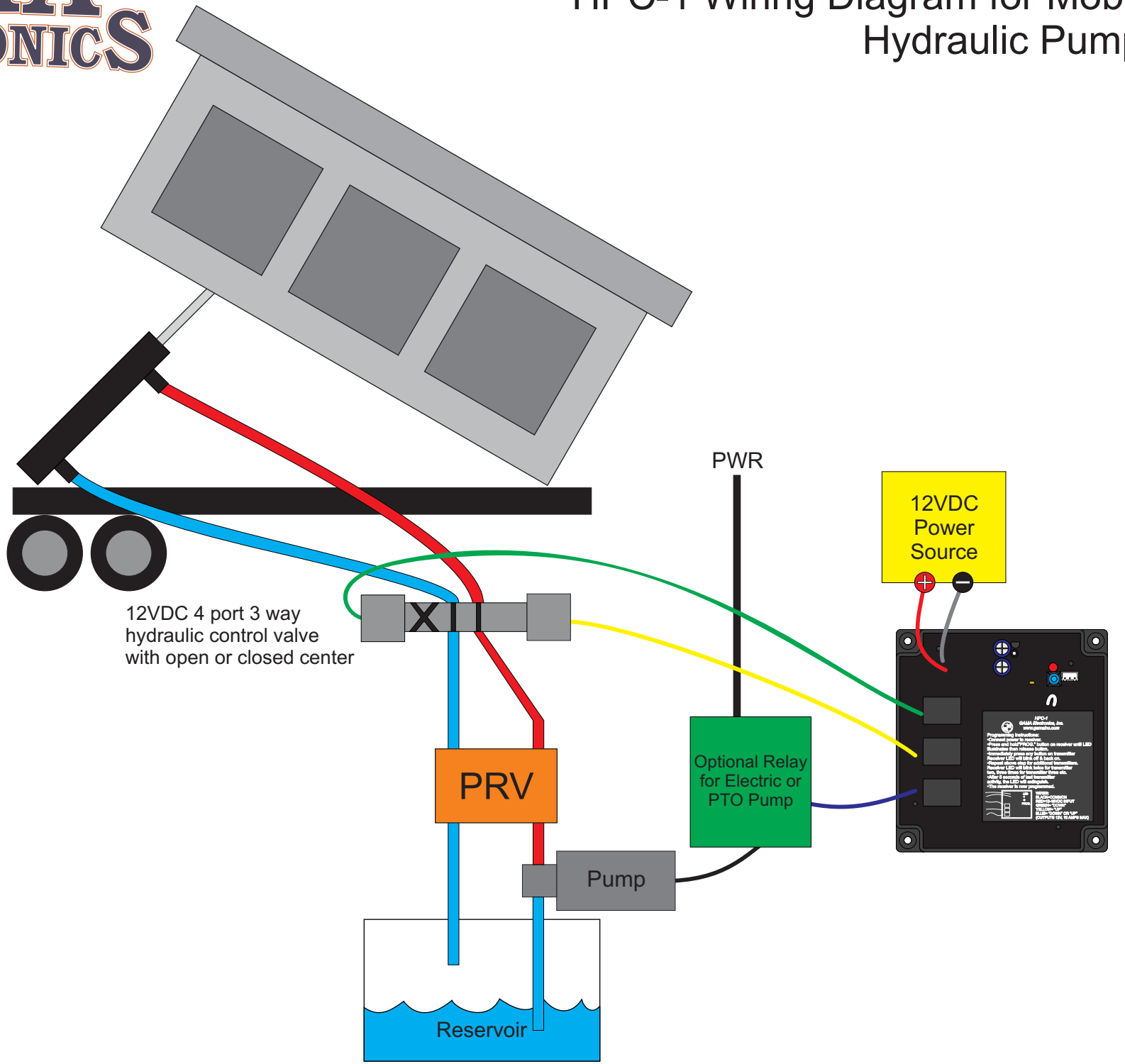
HPC-1 Wiring Diagram for Mobile Hydraulic Pumps