Specifications:
- Frequency: 340 MHz.
- Input voltage: 24VDC with reverse polarity protection.
- The output relays are rated at 30A @24VDC.
- Operating temperature range: 0° F to 160° F.
- Transmit range is greater than 100 feet under normal operating conditions.
- Up to 30 keyfob transmitters can be used with each receiver.
- Both transmitters use A23 12V Batteries.
- 9" Wire Leads

Available Accessories:
- 2-Button Waterproof Transmitter (KF340-2WP)
- 2-Button Keyfob Transmitter (KF340-2)
- Package of 6 A23 12V Alkaline Keyfob Batteries (A23-6)
- 2-Button Rechargeable Transmitter (GKF-WPTX-2)

SIZE		REV.
A	RF24V1PR-ASL	A

REVISIONS

LET.	WAS	DATE	APP.	ENTERED
O	Original Release	10/19/17		
A	Update to 30 transmitters per unit	03/09/20		

Waterproof Transmitter (KF340-2WP), Supplied with Waterproof Assembly, Waterproof to IP 65

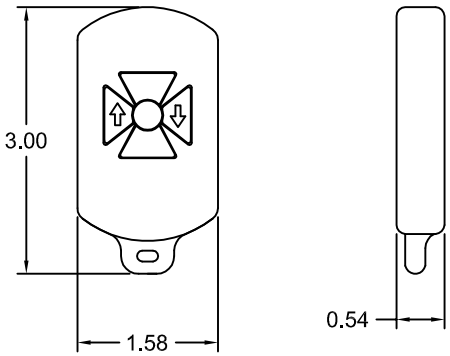

Standard Transmitter (KF340-2), Supplied with Standard Assembly

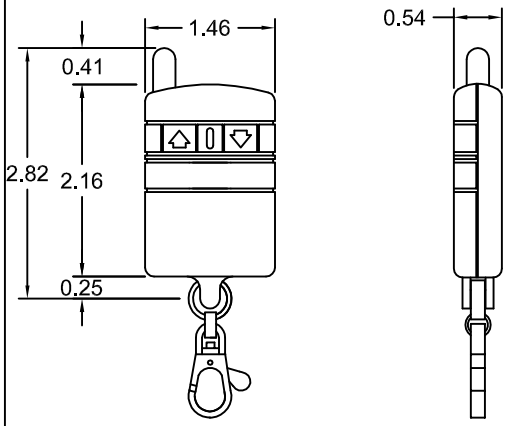

Receiver

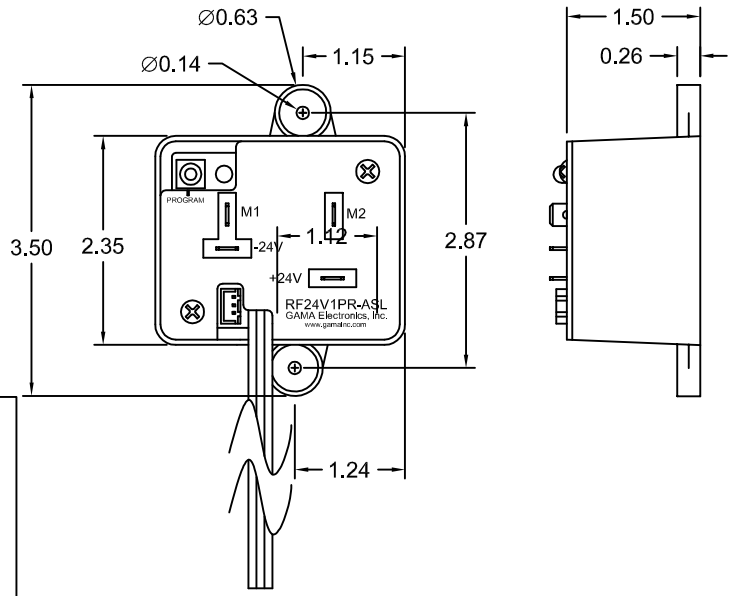

Rechargeable Transmitter (GKF-WPTX-2), Supplied with Rechargeable Assembly

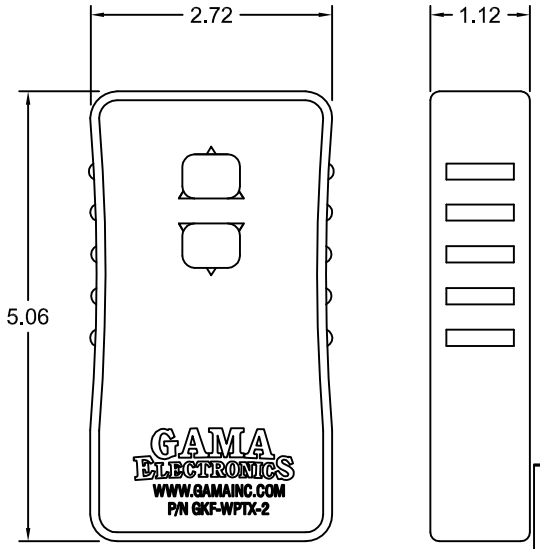

Long Range Antenna (LRA-340), Supplied with Long Range Assembly

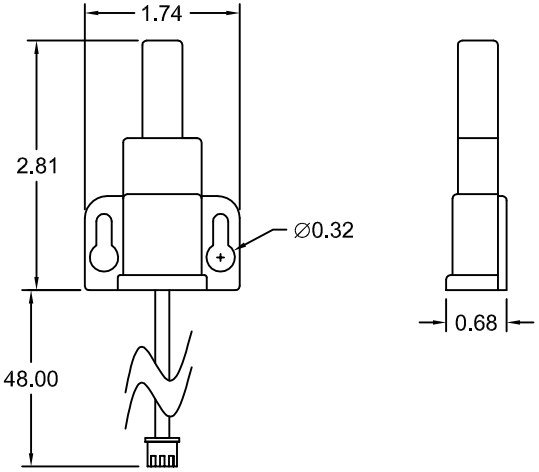

INFORMATION CONTAINED HEREIN IS PROPRIETARY INFORMATION OF GAMA ELECTRONICS INC. THE DISSEMINATION, USE OR DUPLICATION OF THIS INFORMATION, FOR ANY PURPOSE OTHER THAN THAT FOR WHICH THE INFORMATION IS PROVIDED, IS PROHIBITED, EXCEPT BY EXPRESS WRITTEN PERMISSION.

DECIMAL TOLERANCE UNLESS OTHERWISE SPECIFIED:
LINEAR:
.xxxxx ±.0005
.xxxx ±.001
.xxx ±.003
.xx ±.015
x/x ±1/32
x ±1/16
ANGULAR:
.xxxx ±01"
.xx ±01'
x ±1°

THIS DRAWING IN ACCORDANCE WITH DOD-STD-100 UNLESS OTHERWISE SPECIFIED

All dimensions in Inches. (unless otherwise noted)

THIRD ANGLE PROJECTION

GAMA Electronics, Inc.
P.O. Box 1488, Crystal Lake, Il 60039

NAME
Reverse Polarity Remote Control

DRN. KEG 10/19/17
MATERIAL
RELEASED 10/19/17
SHEET 1 OF 1