SIZE		REV.
A	W-70B	O

REVISIONS

LET.	WAS	DATE	APP.	ENTERED
O	Original Release			

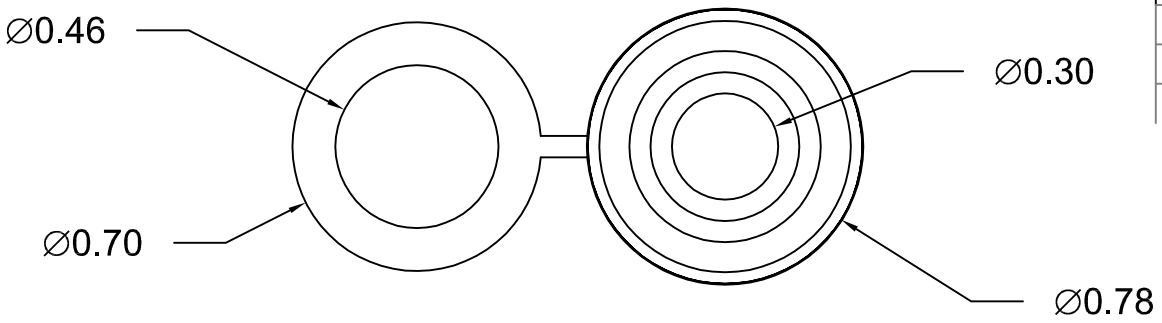

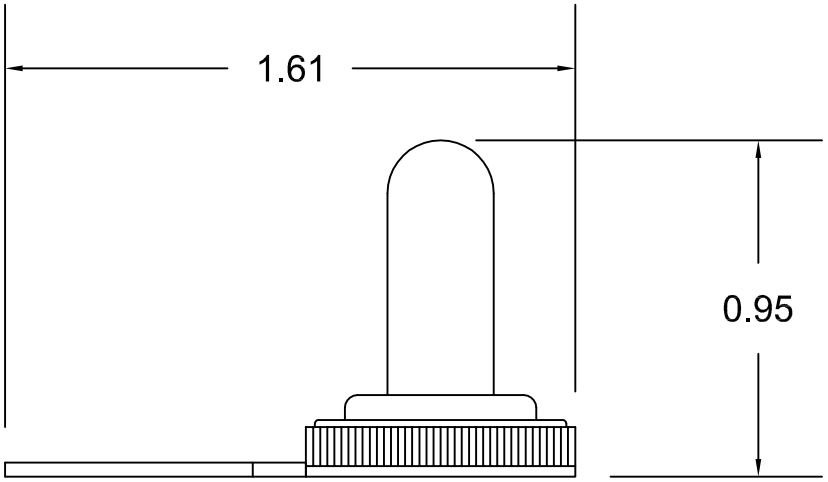

INFORMATION CONTAINED HEREIN IS PROPRIETARY INFORMATION OF GAMA ELECTRONICS INC. THE DISSEMINATION, USE OR DUPLICATION OF THIS INFORMATION, FOR ANY PURPOSE OTHER THAN THAT FOR WHICH THE INFORMATION IS PROVIDED, IS PROHIBITED, EXCEPT BY EXPRESS WRITTEN PERMISSION.

DECIMAL TOLERANCE UNLESS OTHERWISE SPECIFIED:

LINEAR:
.xxxxx ±.0005
.xxxx ±.001
.xxx ±.003
.xx ±.015
x/x ±1/32
x ±1/16

ANGULAR:
.xxxx ±01"
.xx ±01'
x ±1°

THIS DRAWING IN ACCORDANCE WITH DOD-STD-100 UNLESS OTHERWISE SPECIFIED

All dimensions in inches. (unless otherwise noted)

THIRD ANGLE PROJECTION

GAMA Electronics, Inc.
P.O. Box 1488, Crystal Lake, Il 60039

NAME
Waterproof Boot

DRN. KEG 7/17/14

MATERIAL

RELEASED 7/17/14

SHEET 1 OF 1